Exam information

ℹ

Course	Computer systems with project (1DT003)
Time	5 hours.
Type	Digital exam.
Closed book	This is a closed book exam. This means that no aides such as notes, slides, books, internet searches and collaboration with others are allowed.

Instructions

Part A

Part A consists of 6 sections, corresponding to module 0-5 in the course, with 10 points each.

To pass the exam, you must:

1. Get at least 3 points in each of the sections in part A
2. Get at least 36 points (60% of max) on part A

Most of the questions are multiple choice-questions where there is only one correct answer.

If you believe there is more than one correct answer, choose the best one based on context and what has been covered in the course.

Part B

The problems in part B only needs to be answered if you aim at getting grade 4 or 5 on the exam.

To get grade 4 or 5 on the exam, you have to:

1. First pass part A as described above
2. Out of 20 possible points in part B get...
   ...at least 10 points in part B for an exam grade of 4
   ...at least 15 points in part B for an exam grade of 5

Anonymous exam

This is an anonymous exam. You will be identified by an anonymous exam code. When the teaching staff marks the exam they will only be able to see the anonymous exam code and not your true identity. Only after the grades have been submitted will your true identity be known.

1 I confirm that I will not seek assistance from anyone else to answer the exam questions.

- True
- False

I confirm that I will not use unauthorized resources such as notes, course slides, text books, internet searches etc to answer the exam questions.

- True
- False

Totalpoäng: 0

Comments and assumptions

2 If you think that something is wrong with a question or that some information is missing in a question, take a note here.

The questions are numbered. Use the **question number** when you make an assumption or a comment. For example, if you wish to comment on question 7, write **Question 7** on a single line followed by your assumption or comment regarding question 7.

Write your assumptions and comments here

Teckenf...

Ord: 0

Totalpoäng: 0

i

Part A

...in which you show that you shall pass by:

- **Getting at least 3 points in each section of part A**
- **Getting at least 36 points in total on part A**

Mixed concepts

In the below table you find 20 statements. Each statement is identified by a label (A-T).

A	Does not share heap, data, segment, text segment or file descriptor table	**K**	Abstraction used to represent the endpoint of network communication
B	Used to identify network interfaces connected to the same physical medium	**L**	Maximises the CPU utilisation
C	Total memory space exists to satisfy a request, but it is not contiguous	**M**	The requirement of ensuring that no two concurrent processes or threads are in the same critical section at the same time.
D	Communication infrastructure based on statistical multiplexing	**N**	Uses a combination of direct index blocks and indirect index blocks
E	Uses a pair of base and limit registers	**O**	Trying to not fill up queues in routers along a path that will lead to packes being lost.
F	Stores the exit status of a terminated process	**P**	A set of instructions, which is in a human readable format, that is a passive entity stored on secondary storage
G	Confirms reception of data	**Q**	Are caused by internal events.
H	Behaves similar to FCFS for large time slices	**R**	Characterized by few very long CPU bursts
I	Set of rules that defines how incoming datagrams should be processed	**S**	Protects the kernel from user processes
J	Is copied into the system-wide open file table	**T**	Used to examine the status of file descriptors of open I/O channels

3 In the table to the left you find 20 statements. Each statement is identified by a label (A-T).

Pair each of the 10 concepts below with the statement (A -T) that best describes the concept or best relates to the concept. For each concept, answer by entering the chosen statement label (A - T). There are 10 concepts and 20 statements, hence only 10 of the 20 statements will be among the valid pairings.

Concept	Statement
A CPU-bound process	
Protocol	
The Internet	
Program	
Processes	
MAC addresses	
Socket	
Mutual exclusion	
Acknowledgment	
External fragmentation	

Marking: Each correct pairing will result in **1 point**.

Totalpoäng: 10

Module 1

4 Below you find a small C program that compiles without errors.

```
#include <stdlib.h>
#include <stdio.h>

int A[2];
int *B;

int triple(int x) {
  int z = x + x + x;
  return z;
}

int main(void) {
  B = malloc(2*sizeof(int));

  A[0] = triple(1);
  A[1] = triple(2);
  B[0] = triple(3);
  B[1] = triple(4);

  free(B);
}
```

When executing the program, where will the values A[0], B[1], z and the executable code for the triple function be stored?

	Stack segment	Heap segment	Text segment	Data segment
The executable code for the triple function	○	○	○	○
B[1]	○	○	○	○
A[0]	○	○	○	○
z	○	○	○	○

Marking: You get 0.5 point for each correct answer for a maximal 2 points.

Totalpoäng: 2

5

Which of the following statements about system calls is correct?

- ○ On success, all system calls has a return value.
- ○ Executing a system call always requires a transition from user mode to kernel mode.
- ○ Not all system calls will cause a transition from user mode to kernel mode.
- ○ New system call handlers can be added by the user in user space.

Totalpoäng: 1

6 The below diagram shows how a process may transition between the ready queue, the cpu and the I/O wait queue. In the diagram three events that may cause such transition are labeled A, B and C.

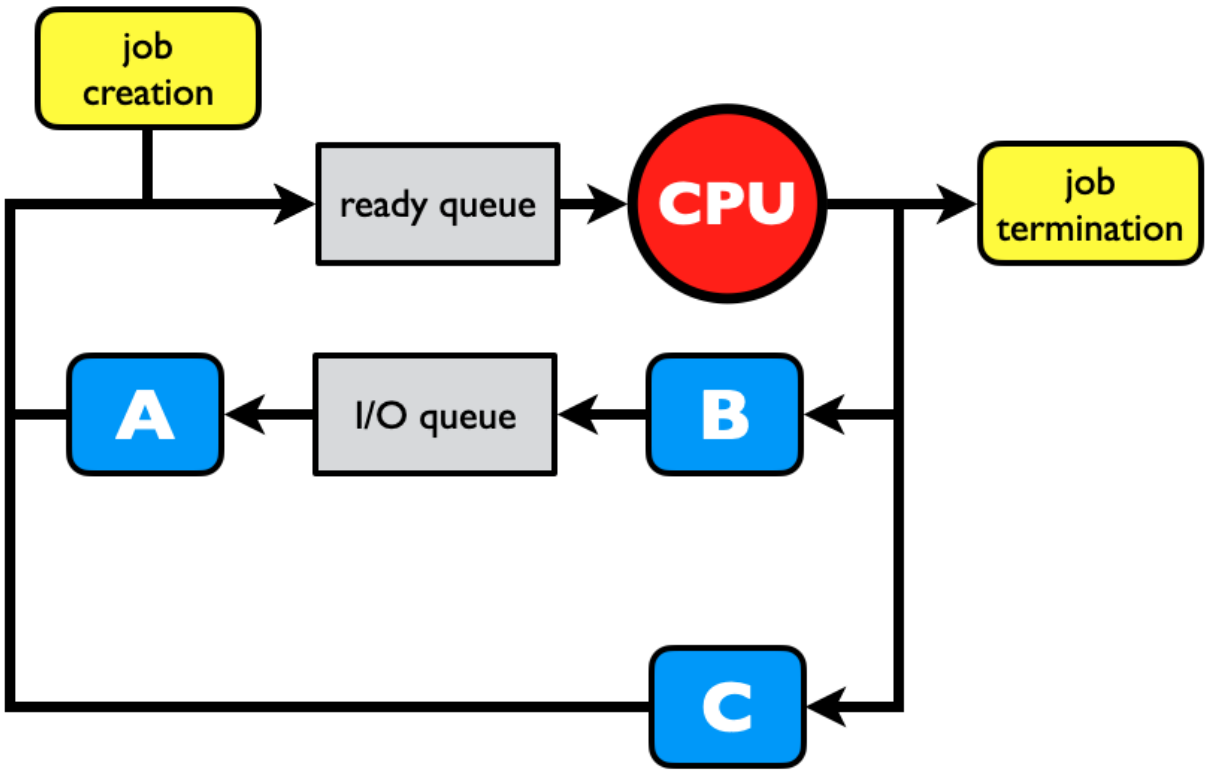

Select the correct description for the events labeled A, B and C.

	I/O Event	I/O request	Time slice expire	Dispatch	Exit	Swap out	Swap in	Context switch
A	○	○	○	○	○	○	○	○
B	○	○	○	○	○	○	○	○
C	○	○	○	○	○	○	○	○

Note: Depending on your screen size and resolution you may need to scroll sideways to see all 8 columns (options).

Marking: You get 0.5 point for each correct answer. If you get all three correct you get 2 points.

Totalpoäng: 2

7

What is the main motivation behind usage of a sliding window at the sending side of a reliable connection?

- To support pipelined transmissions with selective repeat
- To detect varying delays in the network
- To compensate for reordering of datagrams in the network
- To inform the sender about the receiver's capacity

Totalpoäng: 1

8 The Internet protocol stack

The picture below illustrates the four layers in the Internet architecture protocol stack. In the left column, specify the name of each layer. In the right column, specify what is sent at each layer from in the case of an application that uses **TCP**. Answer by dragging the right term to each box.

Hjälp

Uppermost layer		sends:	
		sends:	
		sends:	
Lowermost layer		sends:	

Segment	Application	Network	Packet	Physical
Control	Routing	Socket	Frame	Transaction
Request	Presentation	Transmission	Link	Transport
Client	Session	Message		

Totalpoäng: 2

9

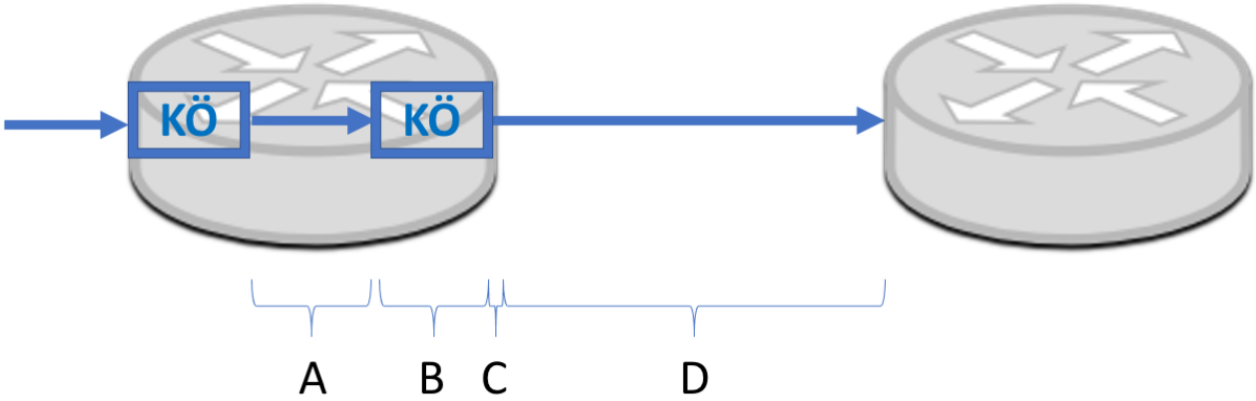

The picture above illustrates the different delay components from when the left router picks a packet from its incoming queue until the packet has been delivered to the incoming queue at the next router along the path towards the destination.

OBEGRIPLIGT FEL I UPPGIFTEN!!!! A3 VS A17

Complete the description of the different delay components by dragging the correct boxes to their correct positions in the text below.

Hjälp

multiplexing delay	transmission delay	CPU speed
queueing delay	current queue length	cable length
segmentation delay	jitter	queue length
application-level protocol	application delay	line speed
Netmask length	queueing speed	speed delay
processing delay	queuing delay	propagation delay

Part A represents the _____ which is limited by the _____. Part B is the _____ which is affected by several factors, e.g. the _____. Part C is the _____ that depends on the _____ while the last part, D, is the _____ that is affected by the _____.

Totalpoäng: 2

Module 2

10 Processes can transition between the states New, Ready, Running, Waiting and Terminated. In the below diagram, 14 suggested transitions (labeled A, B, C, ..., N) between these states are shown.

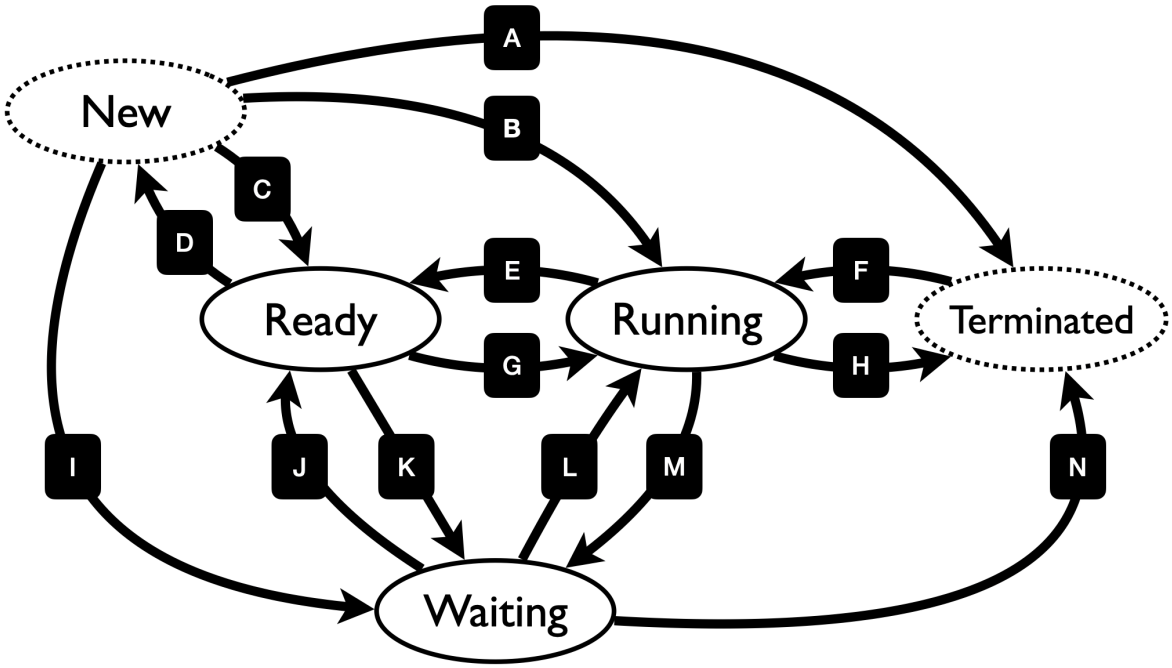

Are all the state transitions shown in the above diagram valid (possible)?

Välj alternativ (Yes, No).

For the three events in the below table, select what state transition is related to this event.

Event	Transition
Doing a **read** system call	Välj alternativ (A, B, C, D, E, F, G, H, I, J, K, L, M, N)
Being preempted by the OS due to the end of a time slice	Välj alternativ (A, B, C, D, E, F, G, H, I, J, K, L, M, N)
The successful creation of a zombie	Välj alternativ (A, B, C, D, E, F, G, H, I, J, K, L, M, N)

Grading: You get 0.5 points for each correct answer.

Totalpoäng: 2

11 Assuming the fork system calls never fails, when executing the following program:

```
#include <stdio.h>
#include <unistd.h>

int main()
{
    fork();
    fork();
    fork();

    printf("X");
}
```

How many Xs are printed?

- 1
- 4
- 3
- 8

Totalpoäng: 1

12 When reading from and writing to pipes, these four cases are important.

Attempt	Conditions	Result
Read	Empty pipe, writer attached	A
Write	Full pipe, reader attached	B
Read	Empty pipe, no writer attached	C
Write	No reader	D

What are the resulting actions A, B, C and D?

	Blocks the reader	Blocks the writer	Causes a SIGPIPE	Returns end of file	Writes zero bytes	Terminates all attached readers	Blocks both the reader and the writer	Closes all read descriptors connected to the pipe
A	○	○	○	○	○	○	○	○
B	○	○	○	○	○	○	○	○
C	○	○	○	○	○	○	○	○
D	○	○	○	○	○	○	○	○

Note: Depending on your screen size and resolution you may need to scroll sideways to see all 8 columns (options).

Marking: You get 0.5 points for each correct answer for a maximum of 2 points.

Totalpoäng: 2

13 Signal handlers makes it possible to...

- ...implement user-level semaphores without the need of waiting queues
- ...replace the default kernel handling of some exceptions and interrupts with own handling in user-space
- ...avoid stack overflow using signal locks
- ...share memory between threads residing in different processes

---

Totalpoäng: 1

14 Drag the right statements into the text below.

Hjälp

- TCP will do a fast retransmit
- The sender will wait too long before retransmitting a lost segment
- The connection will be closed
- Lost segments will not be retransmitted
- The receiver will fill up its receiver window
- Cumulative acknowledgments will affect the RTT
- TCP will go into slow start mode

In TCP, the RTT is constantly measured with every acknowledged segment. The RTT measurements are then used to adjust the timeout timer. A too low timeout timer value will cause inefficient operation because _____ . However, a too high timeout timer value will also cause inefficient operation because _____ . Therefore it is necessary to find a good value of the timeout timer to avoid inefficient operation. och för det tredje fältet .

Totalpoäng: 1

15 On success, the system calls dup, dup2, pipe and close operates on the callers file descriptor table. For each of these system calls, on success how will this affect the size of the file descriptor table?

	Unchanged	One row is added	Two rows are added	Removes one row	Removes two rows
pipe	○	○	○	○	○
dup	○	○	○	○	○
dup2	○	○	○	○	○
close	○	○	○	○	○

Grading: You get 0.5 points for each correct answer for a maximum of 2 points.

Totalpoäng: 2

16 TCP usually acknowledges each incoming segment either immediately or slightly delayed. But in some cases it does not send an ackowledgement at all.

Which is an example situation when a TCP acknowledgement is not sent?
Välj ett alternativ:

- ○ If the receiver buffer is full
- ○ If the checksum in the segment header fails
- ○ If a segment has been fragmented
- ○ If there is no data in the incoming segment

Totalpoäng: 1

Module 3

17 Four processes A, B, C and D arrives to the ready queue with arrival times and CPU burst times according to the following table.

Process	Arrival time	Burst
A	0	1
B	1	3
C	3	5
D	4	1

Below you see six Gantt charts labeled 1 - 6.

1

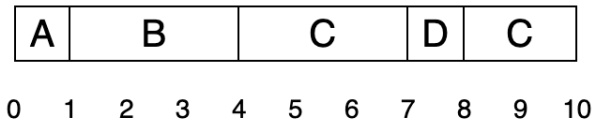

2

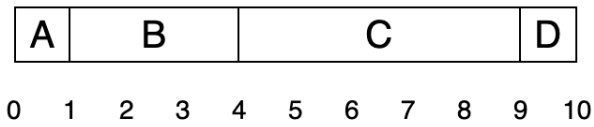

3

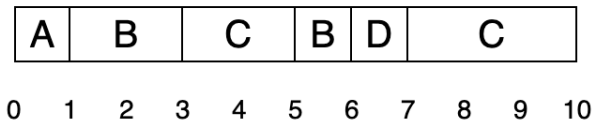

4

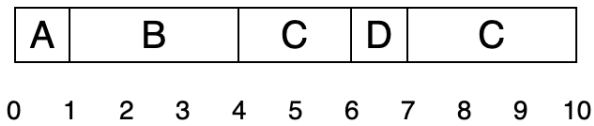

5

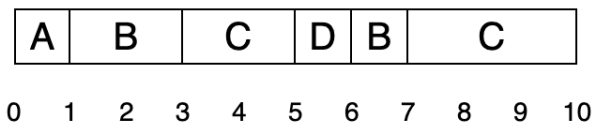

6

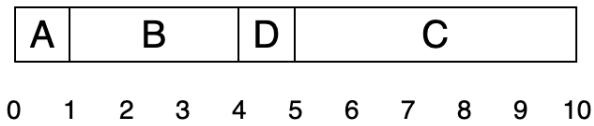

For each of the CPU scheduling algorithms below, indicate which Gantt chart (1 - 6) will be produced for the processes A, B, C and D.

	1	2	3	4	5	6
First Come First Serve (FCFS)	○	○	○	○	○	○
Shortest Job First (SJF)	○	○	○	○	○	○
Preemptive Shortest Job First (PSJF)	○	○	○	○	○	○
Round Robin (RR) with q = 2	○	○	○	○	○	○

Marking: You get 0.5 point for each correct answer for a maximum of 2 points.

Totalpoäng: 2

18

What action(s) are taken by the dispatcher?

- ○ Selects which process to select from the ready and sends it to the short term scheduler.
- ○ Gives control of the CPU to the process selected by the short-term scheduler.
- ○ Moves a process from the ready queue to secondary storage.
- ○ Preempts a low priority process when a higher priority process arrives to the ready queue.

Totalpoäng: 1

19 In a CPU scheduling simulation processes arrives to the ready queue according to the following table.

Process	Arrival time	Burst
A	0	5
B	2	3
C	3	2
D	6	2

The simulation results in the following Gantt chart.

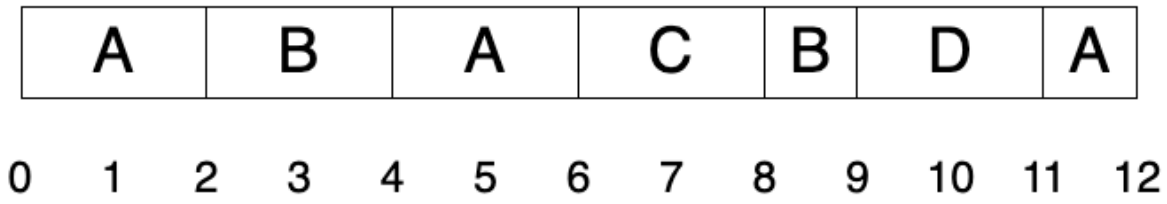

From the above Gantt chart, calculate the average response time and the average waiting time.

Tip: Remember that 1/2 = 0.5, 1/4 = 0.25, 3/4 = 0.75.

Average response time: [ ] .

Average waiting time: [ ]

Marking: Each correct answer will result in 1 points for a maximal total of 2 points.

Totalpoäng: 2

20 Routing (2p)

En student sitter och kämpar med routinglaborationen och har nu kommit så långt att hen bestämt sig för en del IP-addresser som skall användas enligt följande figur:

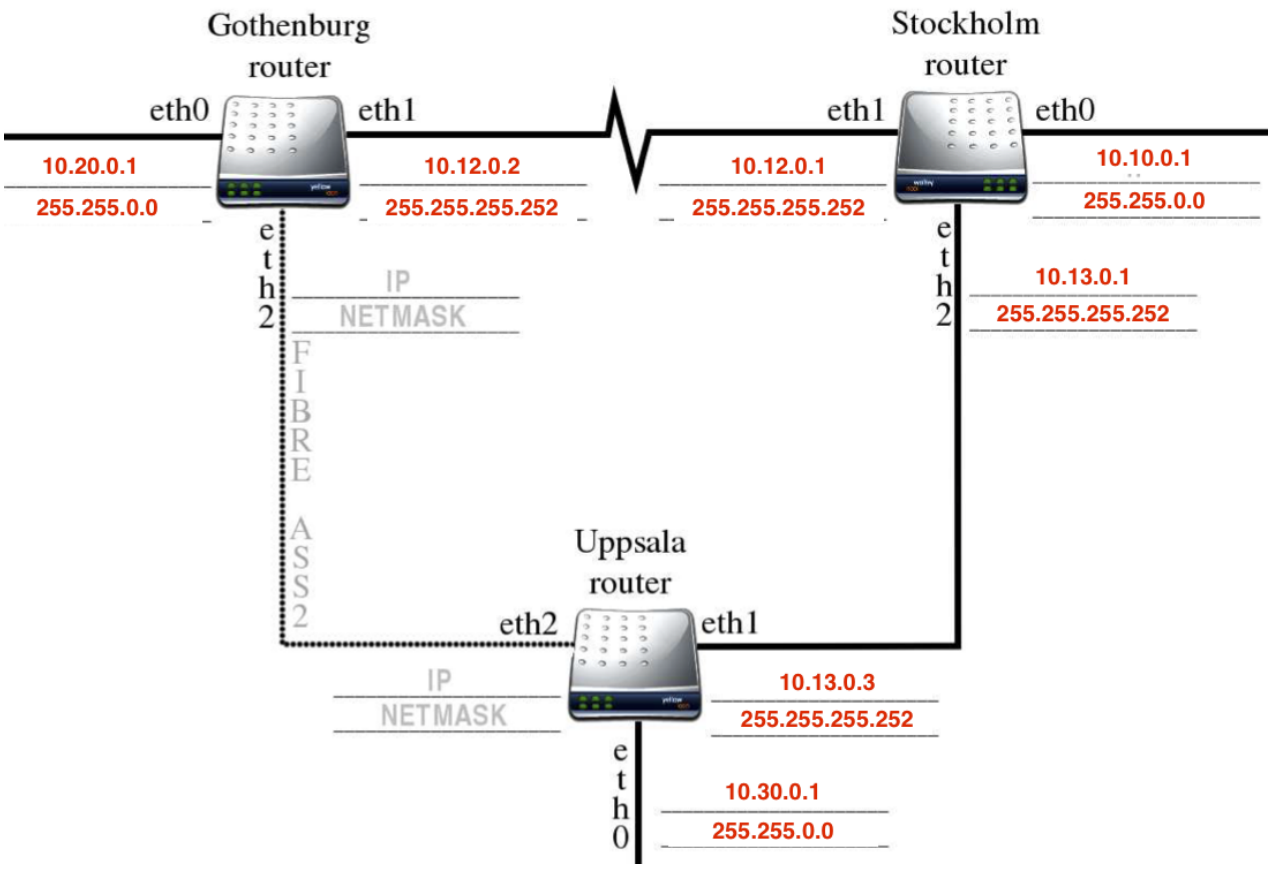

Studenten har börjat skapa en routingtabell (som inte nödvändigtvis är komplett eller helt korrekt) enligt nedan. Dra de rätta värdena enligt studentens plan i ovanstående figur till de tomma luckorna i routingtabellen.

Hjälp

10.13.0.3	eth0	10.13.0.1
10.12.0.2	255.255.255.0	10.20.0.0
eth1	255.255.255.252	10.30.0.0
eth2	255.255.255.255	10.12.0.1

Routing table at Stockholm router

Totalpoäng: 2

21

In the figure of the network in the previous problem, which interface on what router has been assigned an IP address and netmask combination that will not work when trying to send data between the different networks?

The [Välj alternativ] (eth0, eth1, eth2) interface in the [Välj alternativ] (Gothenburg, Uppsala, Stockholm)route.

Both answers must be correct for 1 point.

Totalpoäng: 1

22 Use drag and drop to make the following two sentences correct.

Hjälp

short | many | long | few

An I/O-bound process spends more time doing I/O than computations and is characterized by [ ] [ ] CPU bursts.

A CPU-bound process spends more time doing computations and is characterized by [ ] [ ] CPU bursts.

Marking: You get 0.5 points for each correct answers for a total maximal of 2 points.

Totalpoäng: 2

Module 4

23 Below you find diagrams showing three systems A, B and C.

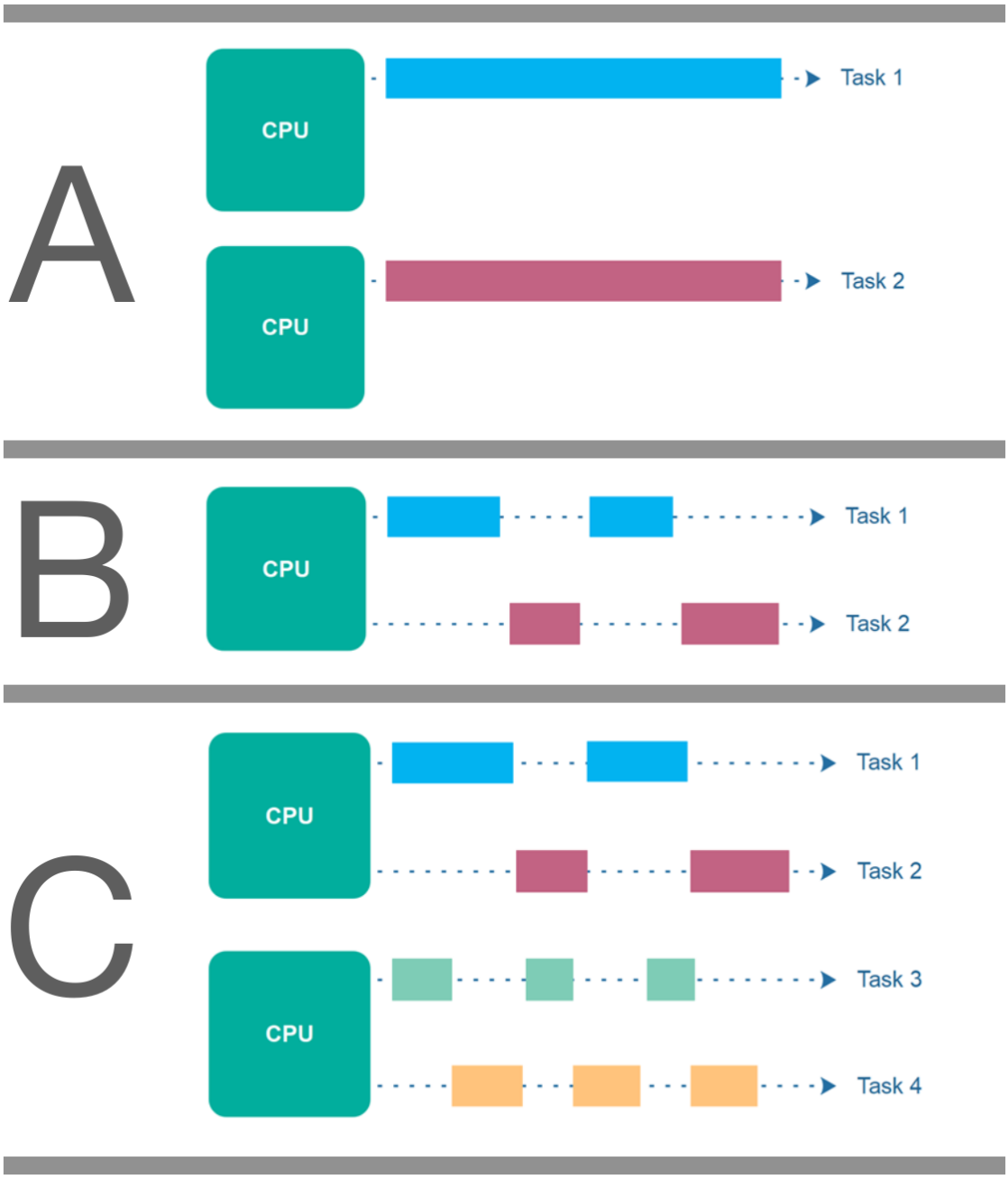

For each system (A, B and C), Indicate below if the system shows an example of parallelism only, concurrency only or both concurrency and parallelism.

	Parallelism only	Concurrency only	Both concurrency and parallelism
A	○	○	○
B	○	○	○
C	○	○	○

Marking: You get 0.5 point for each correct answer. I you get all three correct you get 2 points.

Totalpoäng: 2

24

Select the four necessary conditions for deadlock

- [ ] Progress
- [ ] Mutual preemption
- [ ] Mutual exclusion
- [ ] Critical section
- [ ] Fairness
- [ ] Bounded wait
- [ ] Starvation
- [ ] Exclusive wait
- [ ] Circular wait
- [ ] Circular exclusion
- [ ] No preemption
- [ ] Hold and wait

Marking: You get 0.25 points for each correct answer.

Totalpoäng: 1

25

Which of the following statements about threads is true?

- A thread is the smallest sequence of instructions that can be managed independently by a scheduler.
- Kernel-level threads are in general faster than user-level threads to context switch.
- On a multi core CPU, threads can never execute in parallell, only concurrently with each other.
- Threads can only exist as part of a thread pool.

Totalpoäng: 1

26 Transaction properties

The ACID rule is used to remember four desirable properties of transactions. But what does the letters stand for?

Choose the right choice for each of the letter below.

Välj alternativ (Adaptiveness, Authentication, Availability, Addressability, Atomicity, Abstraction)

Välj alternativ **(Circular, Correctness, Computable, Checkable, Concurrency, Consistency)**

Välj alternativ **(Identifiable, In-order, Interchangable, Interruptable, Isolation, Intermittent)**

Välj alternativ **(Disk-storage, Definable, Deconstructable, Durability, Deterministic, Declarable)**

Totalpoäng: 1

27 Below you find three resource allocation graphs (RAGs) for systems A, B and C.

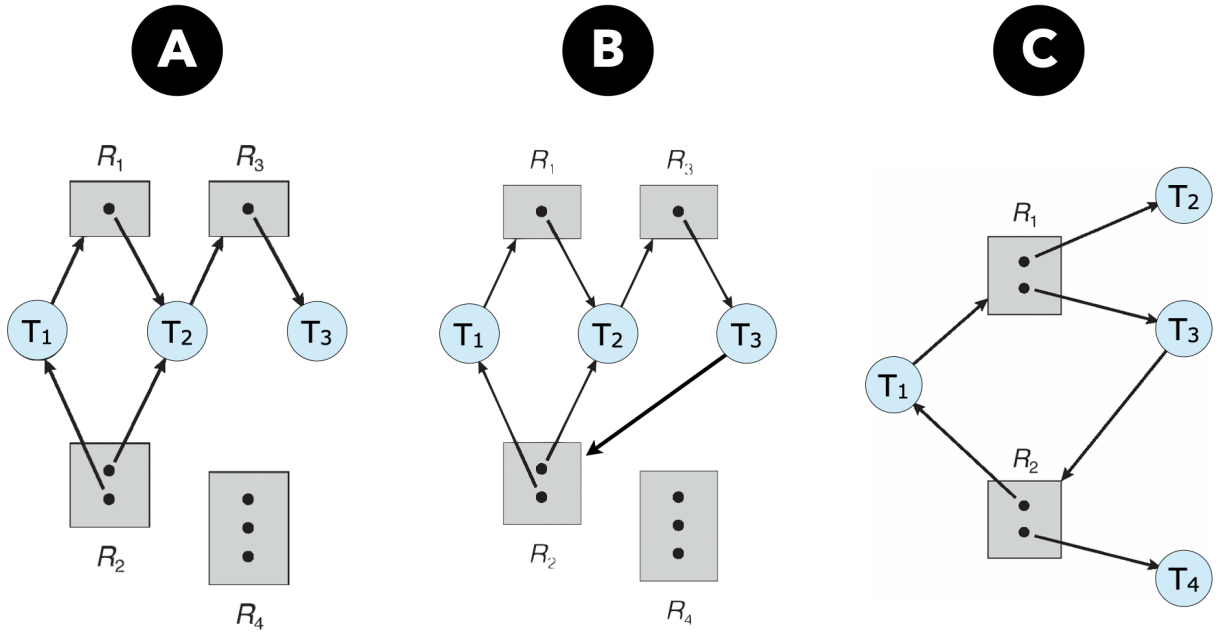

Which of the systems are in a deadlock and which are not in a deadlock?

	Deadlock	No deadlock
A	○	○
B	○	○
C	○	○

Marking: You get 0.5 points for each correct answer and 2 points if you get all three correct.

Totalpoäng: 2

28

If a single pipe is used for duplex (aka bidirectional) communication, i.e., communication in both directions:

- A data race can only occur if there are more than one reader.
- A data race may occur.
- A race condition may occur.
- A race condition cannot occur.

Totalpoäng: 1

29

Which of the following statements about data races and race conditions is true?

- All data races are caused by race conditions.
- All race conditions are caused by data races.
- Race conditions and data races are not a subset of one another, neither the necessary, nor the sufficient condition for one another.
- Data races are a subset of the race conditions.

Totalpoäng: 1

30 What of the following can be used to achieve serial equivalence?
Välj ett alternativ:

- Transactions
- Permanent storage
- Locks and semaphores
- Time synchronisation

Totalpoäng: 1

Module 5

A schematic view of paging is shown below.

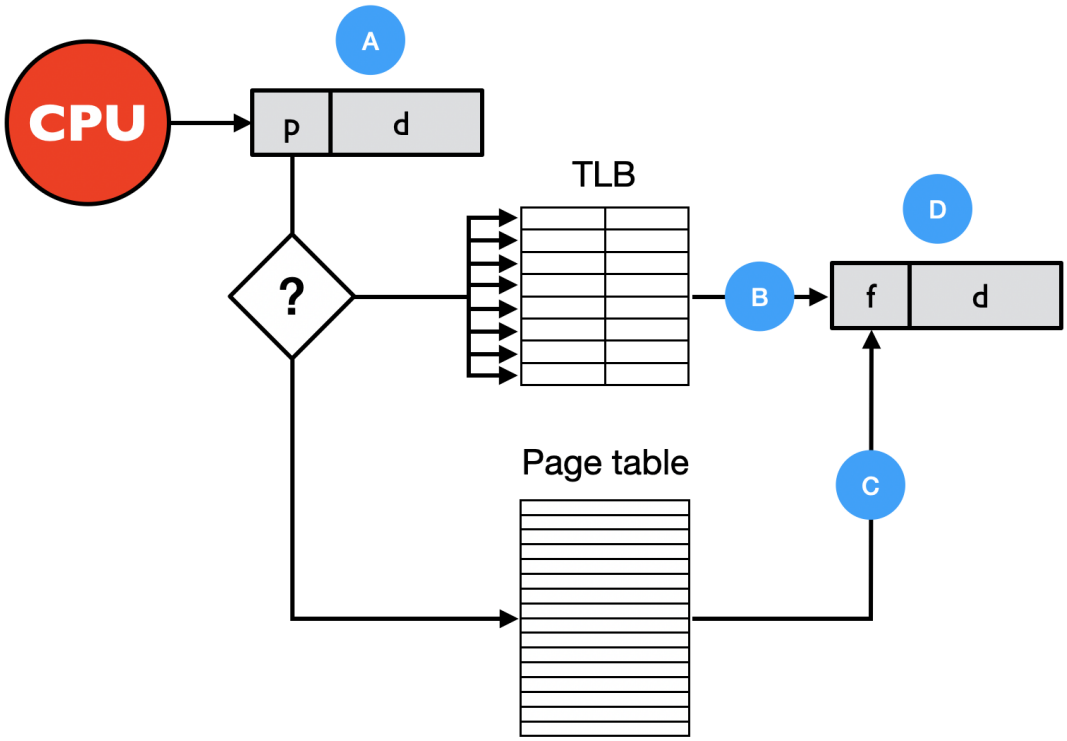

31 In the left diagram, a schematic view of paging is shown.

Select the correct descriptions for the labels A, B, C and D.

	Logical address	TLB hit	TLB miss	Physical address	MMU	Virtual memory	Exception	Interrupt
A	○	○	○	○	○	○	○	○
B	○	○	○	○	○	○	○	○
C	○	○	○	○	○	○	○	○
D	○	○	○	○	○	○	○	○

Note: Depending on your screen size and resolution you may need to scroll sideways to see all 8 columns (options).

Marking: You get 0.5 point for each correct answer for a maximal total of 2 points.

Totalpoäng: 2

Module 5

32

Introducing the separation between logical and physical memory:

- Makes accessing memory faster.
- Solves the problem with internal fragmentation
- Makes it possible to move a process around in memory during runtime.
- Solves the problem with external fragmentation.

Totalpoäng: 1

33 **IEC binary prefixes:** 1 KiB = 2^{10} Byte, 1 MiB = 2^{20} Byte and 1 GiB = 2^{30} Byte.

A system with 16 bit virtual addresses uses paging to translate virtual addresses to 12 bit physical addresses. Each page is 512 Byte.

Size of the virtual adress space

Use an integer together with the largest possible IEC binary prefix to denote the size of the virtual address space.

The size of the virtual address space is [ ] [Välj alternativ] (Byte, KiB, MiB, GiB)

Address translation

You discover that the virtual address 0x142E is translated to the physical address 0x0E2E.

This means, that in the page table, page number [ ] is translated to frame number [ ]

. **Answer in decimal values.**

Marking: You get 0.5 points for each correct answer and 2.0 points if you get all three correct.

Totalpoäng: 2

34 Which of the following organisations were established by the United Nations?
Välj ett alternativ:

- The Internet Governance forum (IGF)
- The Internet Society (ISOC)
- The Internet Engineering Task Force (IETF)
- The Internet Research Task Force (IRTF)

Totalpoäng: 1

35 Postel's law, sometimes also referred to as the generosity principle, is a cornerstone in the design of TCP/IP. What of the following is an example of Postel's law in practice?

Välj ett alternativ:

- TCP congestion avoidance algorithms
- Process multiplexing using ports
- Classless inter-domain routing (CIDR)
- Best-effort delivery of datagrams based on destination address only

---

Totalpoäng: 1

36

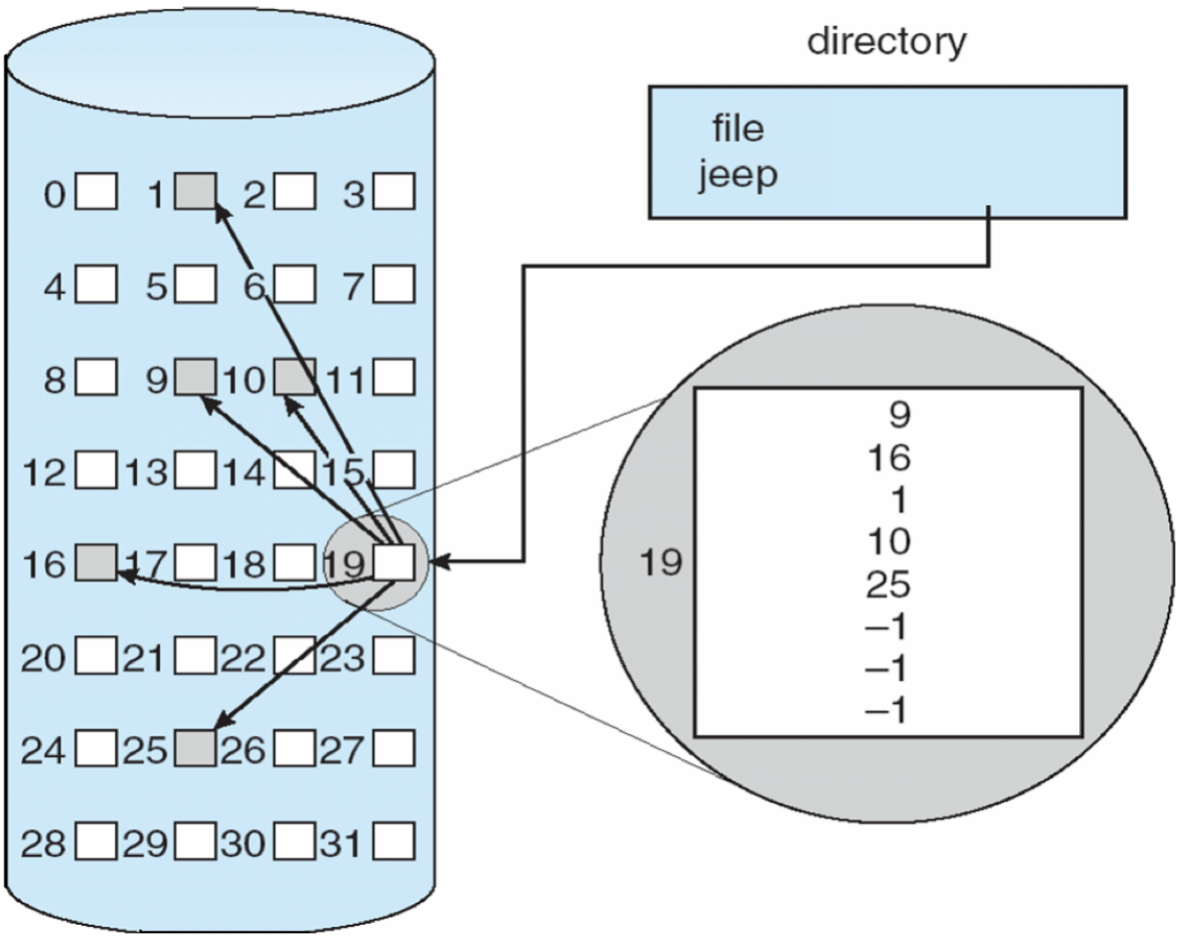

What disk block allocation method is depicted in the above figure?

- Indexed allocation
- FAT
- Linked allocation
- Contiguous allocation

Totalpoäng: 1

37 Which of the following statements about the directory structure is correct?

- For each open file, the per-process open-file table points to an entry in the directory structure.
- When closing an open file, the file is removed from the directory structure.
- The directory structure includes file names and associated file control block numbers.
- The system-wide open-file table caches parts of the directory structure.

Totalpoäng: 1

Module 5

Memory management, files and file systems

The below figure shows a number of file system data structures.

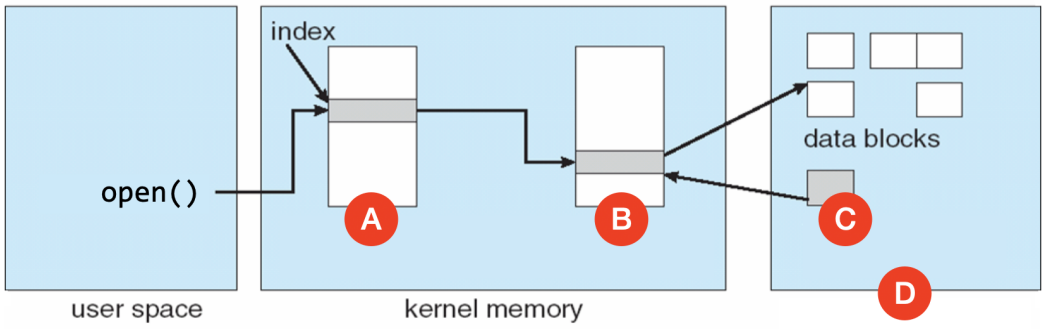

38 The figure to the left shows a number of file system data structures.

What are the names for the data structures labeled A, B and C?

	Per-process open file table	System-wide open file table	Directory structure	File control block	FAT	Page table	Process control block	Two-level index
A	○	○	○	○	○	○	○	○
B	○	○	○	○	○	○	○	○
C	○	○	○	○	○	○	○	○

Note: Depending on your screen size and resolution you may need to scroll sideways to see all 8 columns (options).

Marking: You get 0.25 points for each correct answer and 1 points for all correct.

Totalpoäng: 1

End of part A

This is the end of part A of the exam.

Part B

...in which you demonstrate yourself worthy to get a higher grade by:

- **First having passed part A**
- **Scoring at least 10 points (out of 20) for grade "4"**
- **Scoring at least 15 points (out of 20) for grade "5"**

Part B

Delays in a network

The first two problems in part B relate to this scenario:

You are designing an application for live video monitoring of a remote location over a low-speed link. The video feed is a live feed with a application-level bitrate of **240 kBit/s** for the video data that is sent into the network through an access network with a link speed of **256 kBit/s**.

The video data is sent in packets with a total per-packet overhead of **64 bytes** used for all the headers from the application, transport, network and link layers. I.e., 64 bytes are used in each packet for the application, UDP, IP and link layer headers.

From the remote location to your computer where you monitor the video feed, there is a network path delay of **60 ms**. This includes all transmission, propagation, queueing and processing delays of the entire path between the remote location and your computer.

For the problems related to this scenario, it could be good to know that:

Ratio	Equals
1/8	0,125
1/16	0,0625
1/32	0,03125
1/64	0,015625

39 What is the minimum total delay you can achieve, i.e., the delay from when something is caught on camera at the remote location until it can be shown on your computer?

The minimum total delay achievable is: [ ] ms

Totalpoäng: 2

40 Explain how you calculated the minimum delay in the previous question.

Ord: 0

For the full 3 points, you need to clearly describe how you computed the minimum total delay.

Totalpoäng: 3

Part B

Client configuration

41 Assume that you are turning on a computer that has been turned off for a week. The computer has no cached mappings from FQDN to IP or from IP to MAC addresses stored.

The first thing that happens when the computer has booted is that it executes a batch script that fetches a web page using HTTP from the server **server.uu.se** .

Fill in the blanks in the text below so that it correctly describes the series of actions.

Hjälp

default gateway	ICMP
HTTPS	NAT box
DNS server	MAC address
Netmask	HTTP request
UDP	IPv4 address
three-way handshake	broadcast
HTTP reply	HTTP
TCP	network configuration parameters
ARP	TCP shutdown
DNS request	DHCP

First, the computer needs to learn its _____ . This is done by sending a _____ message to get its configuration from a _____ server. Next, it needs to learn the IP address of **server.uu.se** so it sends a _____ to the _____ specified in the configuration. As the destination for the request is not on the same network, the computer must first use ARP to resolve the _____ of the _____ using ARP. Once it has that information, the request is sent and the computer learns the IP address of **server.uu.se** in a response message. It can now initiate a _____ connection to **server.uu.se** by doing a _____ and once that is done, send a _____ to the web server.

Totalpoäng: 5

Part B

Network configuration

Your company has been assigned a block of IP addresses from your ISP. The address range is 140.130.24.0/21.

You are in charge of setting up the company network and distribute adresses between the departments of the organisation.

42 What is the maximum number of hosts that could be adressed with this address block if the network is built as one big LAN without routers between different subdepartments?

Your answer: [ ].

Totalpoäng: 1

43 It turns out your company has four departments of equal size which means that the address block can be divided in four parts of equal size.

This means that each of the departments will get an address block that can host ☐ unique hosts each.

The address blocks are identified with the following addresses and prefix lengths according to the table below. *Fill in the subnetwork addresses sorted from lowest to highest value in the third byte of the IP address.*

Subdepartment	Subnetwork address	Prefix length
alfa	140.130.☐.0	☐
beta	140.130.☐.0	-"-
gamma	140.130.☐.0	-"-
delta	140.130.☐.0	-"-

Totalpoäng: 2

Part B

The final problem

Explain step-by-step how the getc system call that allows a program to read a single character typed by a human user on the keyboard can be implemented.

Assume the same system model as in the M1 laboratory assignment. The call for getc is done by job 0.

44 Specify in which order the steps are taken when job 0 calls getc by arranging the actions in the correct order in the table below.

Hjälp

- The kernel decides to resume job 1 while job 0 waits for input
- A system call exception occurs
- The kernel restores the context of job 0
- A keyboard interrupt occurs
- The kernel changes the state of job 1 from running to ready
- The ASCII value of the pressed key is made available to job 0
- The kernel restores the context of job 1
- The kernel saves the context of job 1
- The kernel changes the state of job 0 from running to waiting
- The kernel saves the context of job 0
- Execution of job 1 resumes in user space
- CPU transfers from user to kernel mode
- Job 0 calls getc
- The kernel transfers the CPU from kernel to user mode

Step	Action
1	
2	
3	
4	
5	
6	
7	
8	

Step	Action
9	
10	The human user presses a key on the keyboard
11	
12	The CPU transfers from user to kernel mode
13	
14	
15	
16	

Totalpoäng: 7

This is the end of the exam